ST-40 Shower Trays

Business to Business. Since 1985

SHOWER TRAYS REDEFINED

B2B PRODUCT DESIGN CENTER

Business to Business. Since 1985

Name:

ST-40 SHOWER TRAY RANGE

Slip resistant surface pattern
(easy to clean)

50

50mm edge width enabling installation
of various types of enclosures

90

90mm waste hole

40

40mm shower tray profile

Installation on legs or levelling screws

Business to Business. Since 1985

Name:

ST-40 Square

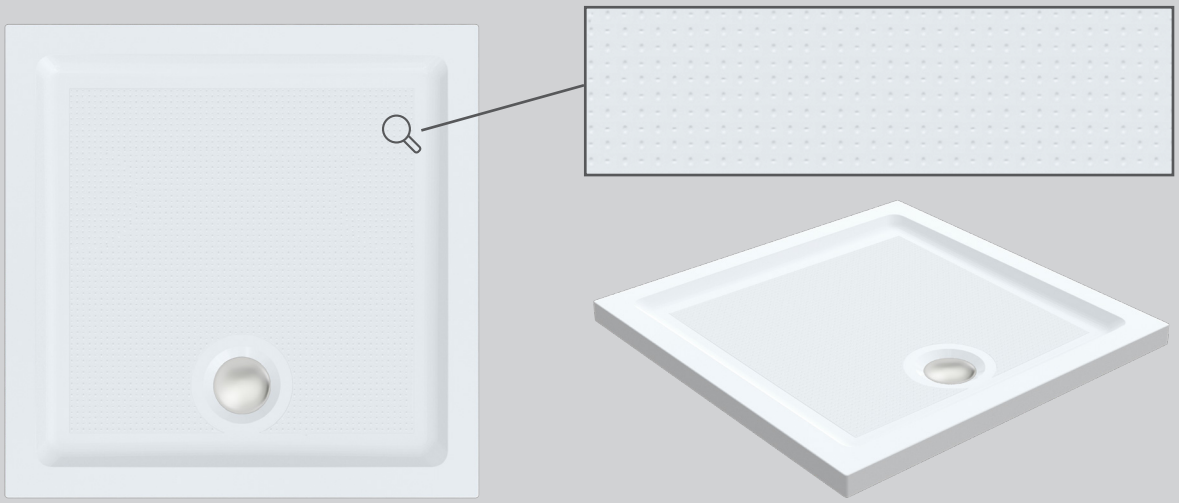

DESCRIPTION:
stone resin square shower tray

TECHNICAL DATA:

- **dimensions:** please see under the drawing on next page
- **shape:** square
- **material:** gelcoat stone-resin
- **installation:** against a wall on levelling screws or legs
- **standard:** BS / EN 14527
- **waste hole :** Ø90
- **pallet quantity:** 10 pcs / pallets double stackable

PACKAGE CONTENTS:

- **stone resin shower tray**
- **levelling screws**
- **fitting instructions and warranty**

Waste kit not included

ADDITIONAL ACCESSORIES AVAILABLE:

- **front panel:** h=100
- **side panel:** h=100

- **5 legs**

Panel + leg kits sold separately

Stone resin shower trays

Name:

ST-40 Square

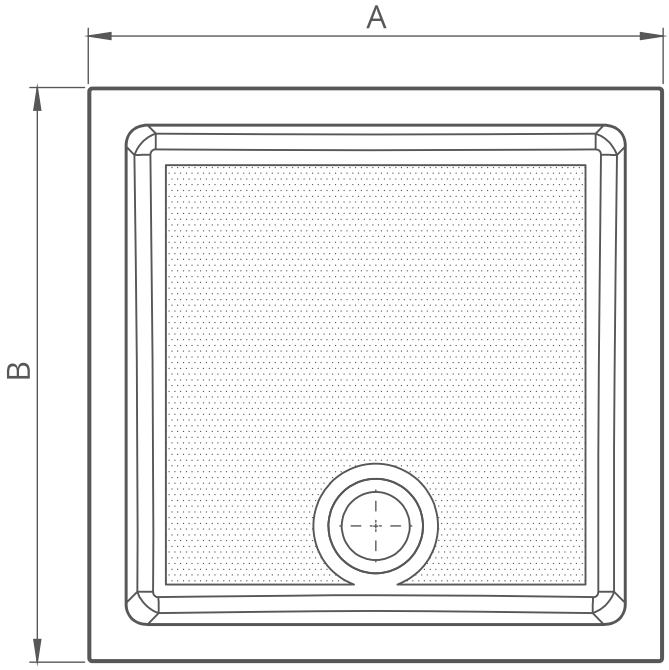

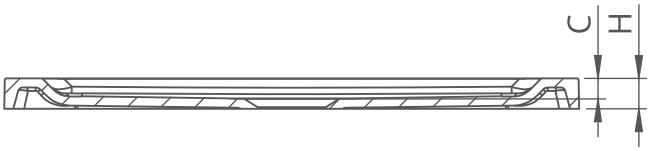

All dimensions in [mm]:

	A	B	C	H	AVAILABLE
PHASE #1	700	700	27	40	MARCH 2020
	760	760	27	40	
	800	800	27	40	
	900	900	27	40	

* **Drawings** available in .pdf and CAD formats

All dimensions in [mm]:

The tolerance of the dimensions:
Lenght (+3 -3)
Width (+2 -2)
Height (+2 -2)

Stone resin shower trays

Business to Business. Since 1985

Name:

ST-40 Square

* **3D** wireframes in .obj format available
* **3D** in .pdf format available

Business to Business. Since 1985

Name:

ST-40 Rectangular

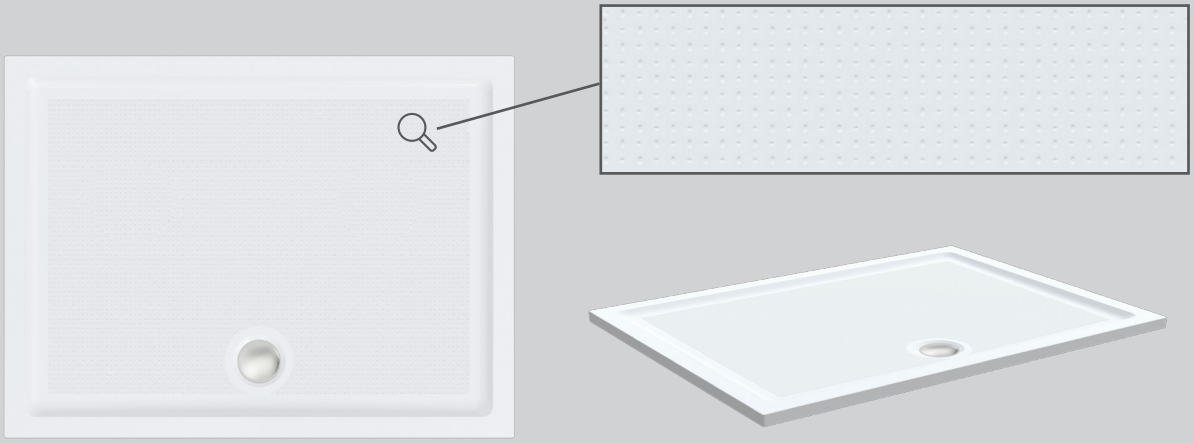

DESCRIPTION:
rectangular stone resin shower tray

TECHNICAL DATA:

- **dimensions:** please see under the drawing on next page
- **shape:** rectangular
- **material:** gelcoat stone-resin
- **installation:** against a wall on levelling screws or legs
- **standard:** BS / EN 14527
- **waste hole :** Ø90
- **pallet quantity:** 10 pcs / pallets double stackable

PACKAGE CONTENTS:

- **stone resin shower tray**
- **levelling screws**
- **fitting instructions and warranty**

Waste kit not included

ADDITIONAL ACCESSORIES AVAILABLE:

- **front panel smooth:** h=100
- **side panel smooth:** h=100

- **5 legs:**
  shower trays up to 1100mm x 800mm
- **8 legs:**
  shower trays equal to or larger than 1200mm x 700mm

Panel + leg kits sold separately

Stone resin shower trays

Name:

ST-40 Rectangular

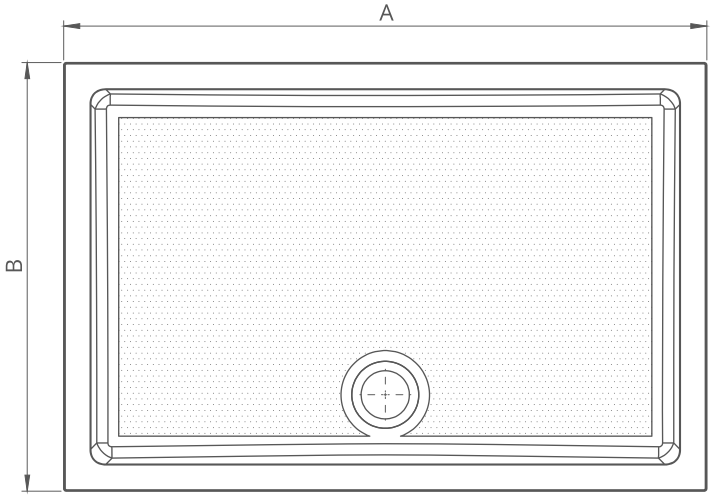

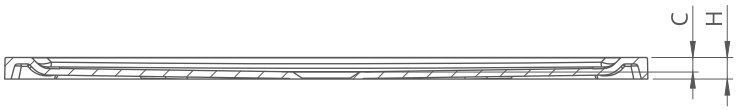

All dimensions in [mm]:

	A	B	C	H	AVAILABLE
PHASE #1	900	800	27	40	MARCH 2020
	1000	700	27	40	
	1000	800	27	40	
	1100	800	27	40	
	1200	700	27	40	
	1200	760	27	40	
	1200	800	27	40	
	1200	900	27	40	
	1400	800	27	40	
	1400	900	27	40	
	1500	800	27	40	
	1600	800	27	40	
	1700	700	27	40	
	1700	800	27	40	

	A	B	C	H	AVAILABLE
PHASE #2	800	700	27	40	JULY 2020
	900	700	27	40	
	900	760	27	40	
	1000	900	27	40	
	1300	800	27	40	
	1400	700	27	40	
	1500	900	27	40	
	1600	700	27	40	
	1600	900	27	40	
	1700	760	27	40	
	1700	900	27	40	
	1800	800	27	40	

* **Drawings** available in .pdf and CAD formats

All dimensions in [mm]:

The tolerance of the dimensions:
Lenght (+3 -3)
Width (+2 -2)
Height (+2 -2)

Stone resin shower trays

Business to Business. Since 1985

Name:

ST-40 Rectangular

* **3D** wireframes in .obj format available
* **3D** in .pdf format available

Business to Business. Since 1985

Name:

ST-40 Quadrant

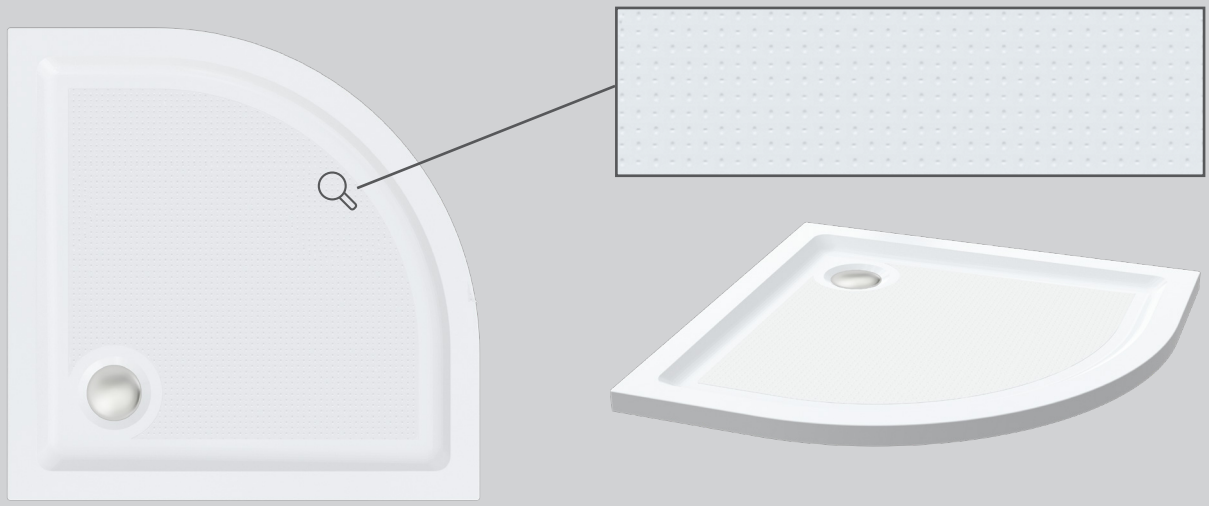

DESCRIPTION:
quadrant stone resin shower tray

TECHNICAL DATA:

- **dimensions:** please see under the drawing on next page
- **shape:** quadrant
- **material:** gelcoat stone-resin
- **installation:** against a wall on levelling screws or legs
- **standard:** BS / EN 14527
- **waste hole :** Ø90
- **pallet quantity:** 10 pcs / pallets double stackable

PACKAGE CONTENTS:

- **stone resin square shower tray**
- **levelling screws**
- **fitting instructions and warranty**

Waste kit not included

ADDITIONAL ACCESSORIES AVAILABLE:

- **panel:** h=100

- **5 legs**

Panel + leg kits sold separately

Stone resin shower trays

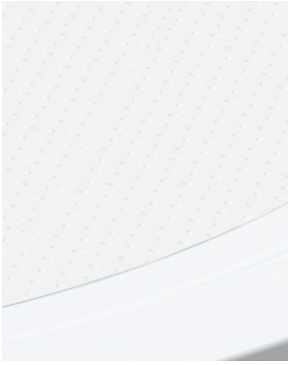

Name:

ST-40 Quadrant

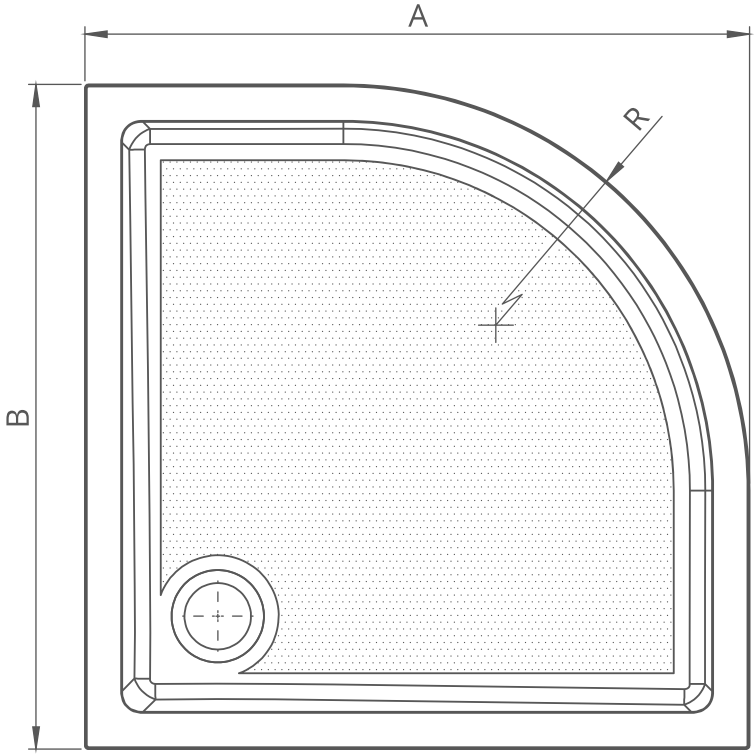

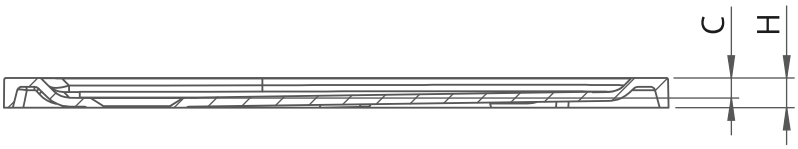

All dimensions in [mm]

	A	B	C	R	H	AVAILABLE
PHASE #1	800	800	27	550	40	MARCH 2020
	900	900	27	550	40	

* **Drawings** available in .pdf and CAD formats

All dimensions in [mm]:

The tolerance of the dimensions:
Lenght (+3 -3)
Width (+2 -2)
Height (+2 -2)

Stone resin shower trays

Business to Business. Since 1985

Name:

ST-40 Quadrant

* **3D** wireframes in .obj format available
* **3D** in .pdf format available

Business to Business. Since 1985

Name:

ST-40 Offset Quadrant

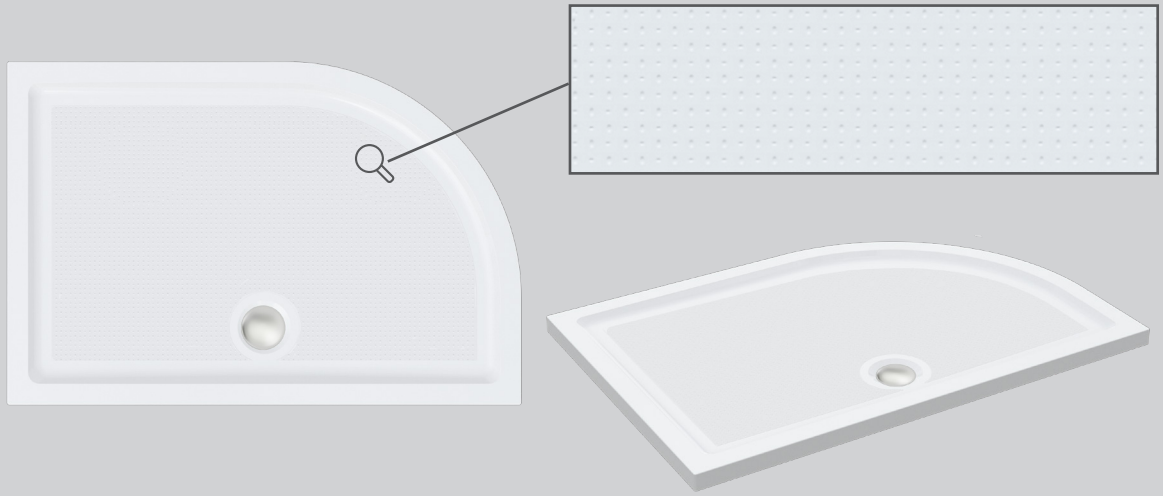

DESCRIPTION:
offset quadrant stone resin shower tray RH / LH

TECHNICAL DATA:

- **dimensions:** please see under the drawing on next page
- **shape:** offset quadrant RH / LH shower tray
- **material:** gelcoat stone-resin
- **installation:** against a wall on levelling screws or legs
- **standard:** BS / EN 14527
- **waste hole :** Ø90
- **pallet quantity:** 10 pcs / pallets double stackable

PACKAGE CONTENTS:

- **stone resin shower tray**
- **levelling screws**
- **fitting instructions and warranty**

Waste kit not included

ADDITIONAL ACCESSORIES AVAILABLE:

- **front panel:** h=100
- **side panel:** h=100

- **5 legs:**
  shower trays up to 1000mm x 800mm
- **8 legs:**
  shower trays equal to or larger than 1200mm x 800mm

Panel + leg kits sold separately

Stone resin shower trays

Name:

ST-40 Offset Quadrant

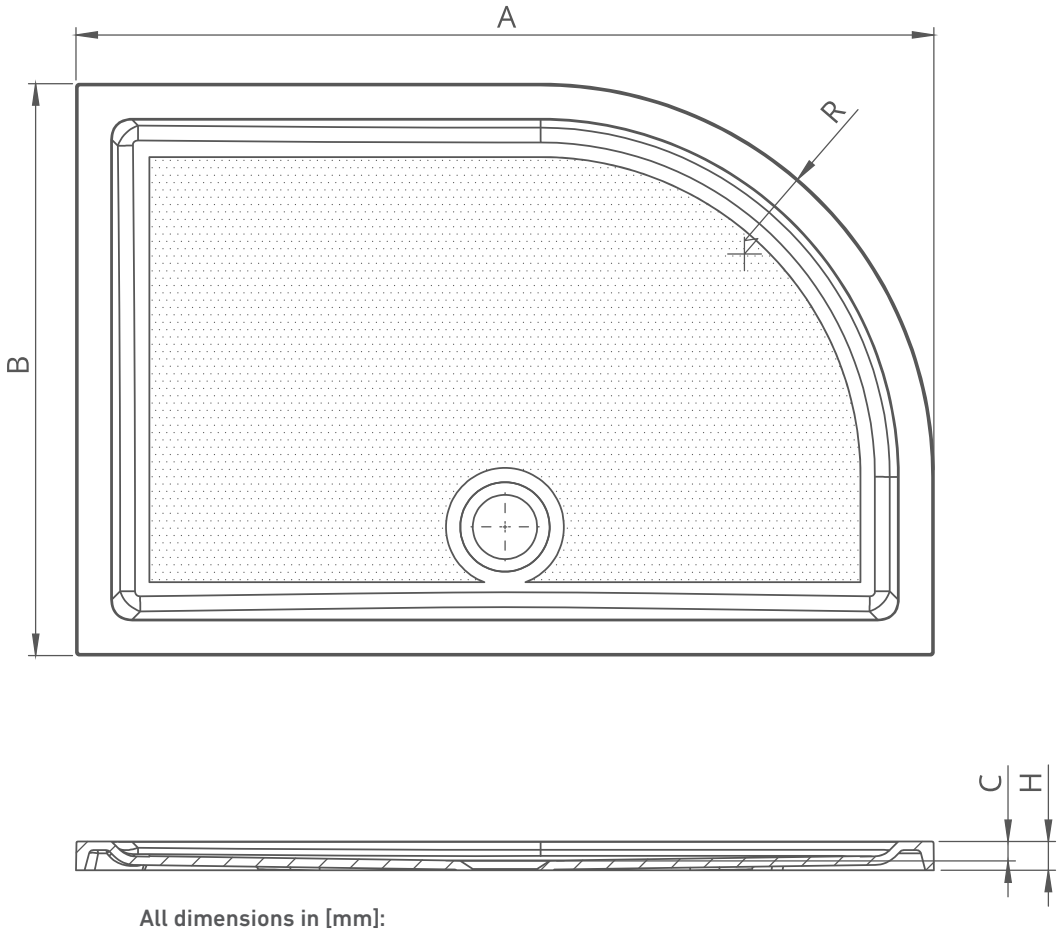

All dimensions in [mm]:

	A	B	C	R	H	AVAILABLE
PHASE #1	1000	800	27	550	40	MARCH 2020
PHASE #2	1200	800	27	550	40	JULY 2020
	1200	900	27	550	40	

* **Drawings** available in .pdf and CAD formats

All dimensions in [mm]:

The tolerance of the dimensions:
Lenght (+3 -3)
Width (+2 -2)
Height (+2 -2)

Stone resin shower trays

Business to Business. Since 1985

Name:

ST-40 Offset Quadrant

* **3D** wireframes in .obj format available
* **3D** in .pdf format available

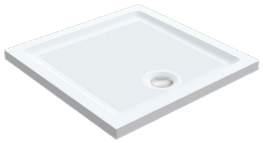			
ST-40 Square	**ST-40 Rectangular**	**ST-40 Quadrant**	**ST-40 Offset Quadrant**
AVAILABLE SIZES: Phase 1 • 700x700 • 760x760 • 800x800 • 900x900	AVAILABLE SIZES: Phase 1 / Phase 2 • 900x800 / • 800x700 • 1000x700 / • 900x700 • 1000x800 / • 900x760 • 1100x800 / • 1000x900 • 1200x700 / • 1300x800 • 1200x760 / • 1400x700 • 1200x800 / • 1500x900 • 1200x900 / • 1600x700 • 1400x800 / • 1600x900 • 1400x900 / • 1700x760 • 1500x800 / • 1700x900 • 1600x800 / • 1800x800 • 1700x700 • 1700x800	AVAILABLE SIZES: Phase 1 • 800x800 R550 • 900x800 R550	AVAILABLE SIZES: Phase 1 • 1000x800 R550 Phase 2 • 1200x800 R550 • 1200x900 R550
Levelling screws			
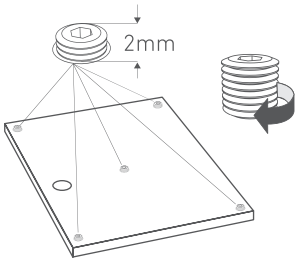	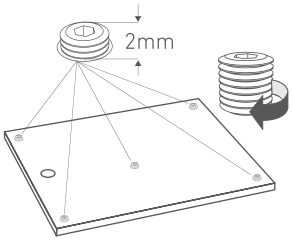 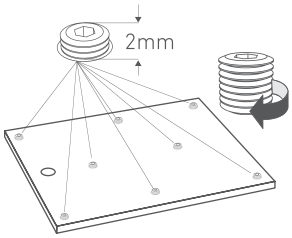	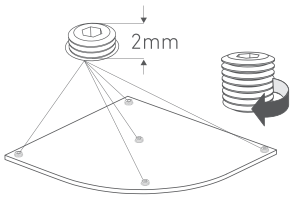	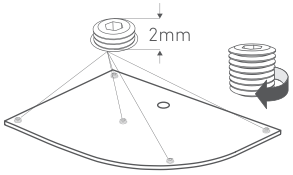 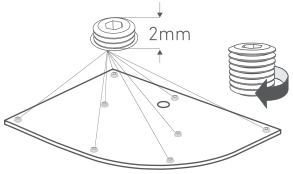

PLEASE SCAN WITH YOUR MOBILE PHONE
TO WATCH A VIDEO HOW TO LEVEL THE TRAY

Stone resin shower tray

ST-40 Screw-in-legs raiser system

Business to Business. Since 1985

* **The legs** are easy to install and robust
* Depending on the tray's size there are **5 or 8 legs**

Stone resin shower tray

ST-40 Paneling system

Business to Business. Since 1985

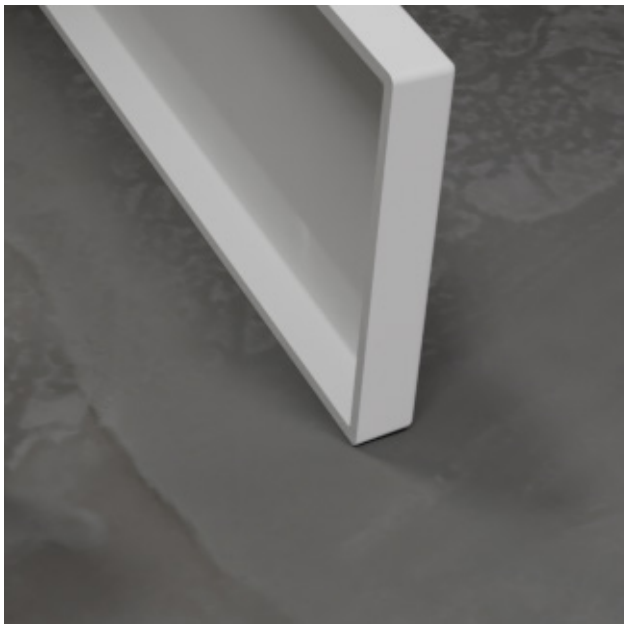

DELUXE PANELS AVALIABLE IN FOLLOWING KITS:

* Panels for up to **1200x1000**
* Panels for up to **1700x900**
* Panels for **all quadrant and offset quadrant trays**

B2B PRODUCT DESIGN CENTER

John Byrne
Sales & Marketing Director

johnbyrne@inverbathrooms.ie
+353 872 577 319

Peter Blackwell
Southern Regional Sales Manager

peterblackwell@inverbathrooms.ie
+44 777 0484 316

Jack Parker
Northern Regional Sales Manager

jackparker@inverbathrooms.ie
+44 736 7344 455

CENTRUM®
Business to Business. Since 1985

PPHU CENTRUM sp. z o.o.
ul. Batorego 81
33-300 Nowy Sącz, Poland
tel.: +48 18 444 44 35
fax: +48 18 444 44 24

e-mail: biuro@pphucentrum.pl
www.pphucentrum.pl

INVER
BATHROOM DESIGNS

Inver Designs DAC
Inver House, Kilbride Industrial Estate
Arklow, Co. Wicklow
tel.: +353 (0) 402 42160

e-mail: sales@inverbathrooms.ie
www.inverbathrooms.ie